2026.10.22

INSTRUCTION MANUAL

FOR ELECTRICALLY INSULATING SAFETY HELMET SECRA type models: H058E00, H058E0, H058E1 and H058E2

INTEGRATED FACE SHIELD type ARC-E40HT protecting against thermal hazards of an electric arc

360 SHIELD type SH-360 for protection against thermal hazards of an electric arc

SAFETY IN POWER

Hubix Sp. z o.o.
Huta Żabiowolska | ul. Główna 43,
96-321 Żabia Wola | POLAND
tel.: +48 46 857 84 40 | hubix@hubix.pl,
www.hubix.pl | www.secra.pl

Manufacturer:
HUBIX Sp. z o.o.
96-321 ŻABIA WOLA Huta Żabiowolska ul. Główna 43
+48 46 857 84 40, hubix@hubix.pl, www.hubix.pl
Notified Body that carried out the EU type-examination:
Helmet – CIOP-PIB, (NB 1437), ul. Czerniakowska 16, 00-701 Warsaw, Poland
Face shield – CIOP-PIB, (NB 1437), ul. Czerniakowska 16, 00-701 Warsaw, Poland
Full protective hood for ears and neck – CIOP-PIB, (NB 1437), ul. Czerniakowska 16, 00-701 Warsaw, Poland
Notified Body conducting the conformity assessment process based on internal production control plus supervised product checks at random intervals (Module C2): CIOP-PIB, (NB 1437), ul. Czerniakowska 16, 00-701 Warsaw, Poland

Helmet
PN-EN 50365:2024-10
Live working - Electrically insulating helmets for working on low and medium voltage installations
PN-EN 397:2025-07 Industrial safety helmets

Face shield
PN-EN ISO 16321-1:2022-10
Eye and face protection for occupational use - Part 1: General requirements

Helmet with face shield and 360 shield
PN-EN IEC 62819:2023-10
Live working – Eye, face and head protectors against the effects of electric arc – Performance reauirements and test

360 shield
PN-EN ISO 11611:2015-11
Protective clothing for use in welding and allied processes
PN-EN ISO 11612:2015-11
Protective clothing - Clothing to protect against heat and flame - Minimum performance requirements
GS-ET-29:2019-06
Principles of testing and certification of face shields for electrical work

PRODUCT H058.xSxx

Electrically insulating safety helmet SECRA type models H058E00, H058E0, H058E1 and H058E2 – the product may be used independently as an electrically insulating helmet. However, when used independently, it DOES NOT provide protection against the thermal hazards of an electric arc.

SET H115.xSxx = H058.xSxx + G113.1127

Electrically insulating safety helmet SECRA type models H058E00, H058E0, H058E1 and H058E2 + Integrated face shield type ARC-E40HT – As a set, it provides protection against the thermal hazards of an electric arc. The face shield must not be used independently and shall ONLY be used with the electrically insulating helmet.

SET H058.xSxx + G113.1127 + G112.1122

Electrically insulating safety helmet SECRA type models H058E00, H058E0, H058E1 and H058E2 + Integrated face shield type ARC + 360 shield type SH-360 – As a set, it provides protection against the thermal hazards of an electric arc. The 360 shield must not be used independently and shall ONLY be used with the electrically insulating helmet and the integrated face shield.

CAUTION

Before starting work, properly trained personnel shall carry out a hazard and risk assessment for eye, face and/or head protection equipment. The product or sets must not be used in environments with a higher risk level than the protection level indicated on the marking. Improper use may pose a hazard to the user's health or life.

	Technical parameters			Technical parameters		
	Helmet model	Face shield	360 shield	Helmet model	Face shield	360 shield
MODEL/TYP	H058E00	ARC-E40HT	SH-360	H058E0	ARC-E40HT	SH-360
KOD	H058.xSDx	G113.1127	G112.1122	H058.xSEx	G113.1127	G112.1122
	H115.XSDx			H115.XSEx		
	H115.xSDx + G112.1122			H115.xSEx + G112.1122		
PN-EN **50365**:2024-10	Class 00 500 V AC/750 V DC			Class 0 1000 V AC/1500 V DC		
PN-EN **397**:2025-07	MM (-40°C +50°C)			MM (-40°C +50°C)		
ANSI/ISEA Z89.1:2014	Type I, Class E, HT, LT			Type I, Class E, HT, LT		
PN-EN ISO **16321-1**:2022-10		UL1,7 3 9 N ET			UL1,7 3 9 N ET	
PN-EN IEC 62819:2023-10	ELIM 28 cal/cm2 APC 2 LTC 2			ELIM 28 cal/cm2 APC 2 LTC 2		
ANS/ISEA Z87.1-2020		Z87+ U6 R5			Z87+ U6 R5	
ASTM F2178/F2178M-20	ATPV 36 cal/cm2			ATPV 36 cal/cm2		
PN-EN ISO 11611:2015-11			Class 1, A1+A2			Class 1, A1+A2
PN-EN ISO 11612:2015-11			A1+A2, B1, C1, F1			A1+A2, B1, C1, F1
PN-EN IEC 62819:2023-10	ELIM 25 cal/cm² 360°			ELIM 25 cal/cm² 360°		
GS-ET-29:2019-06	APC 2			APC 2		

	Technical parameters			Technical parameters		
	Helmet model	Face shield	360 shield	Helmet model	Face shield	360 shield
MODEL/TYP	H058E1	ARC-E40HT	SH-360	H058E2	ARC-E40HT	SH-360
KOD	H058.xSFx	G113.1127	G112.1122	H058.xSGx	G113.1127	
	H115.XSFx			H115.XSGx		
	H115.xSFx + G112.1122			H115.xSGx + G112.1122		
PN-EN **50365**:2024-10	Class 1 7 500 V AC			Class 2 17 000 V AC		
PN-EN **397**:2025-07	MM (-40°C +50°C)			MM (-40°C +50°C)		
ANSI/ISEA Z89.1:2014	Type I, Class E, HT, LT			Type I, Class E, HT, LT		
PN-EN ISO **16321-1**:2022-10		UL1,7 3 9 N ET			UL1,7 3 9 N ET	
PN-EN IEC 62819:2023-10	ELIM 28 cal/cm2 APC 2 LTC 2			ELIM 28 cal/cm2 APC 2 LTC 2		
ANS/ISEA Z87.1-2020		Z87+ U6 R5			Z87+ U6 R5	
ASTM F2178/F2178M-20	ATPV 36 cal/cm2			ATPV 36 cal/cm2		
PN-EN ISO 11611:2015-11			Class 1, A1+A2			Class 1, A1+A2
PN-EN ISO 11612:2015-11			A1+A2, B1, C1, F1			A1+A2, B1, C1, F1
PN-EN IEC 62819:2023-10	ELIM 25 cal/cm² 360°			ELIM 25 cal/cm² 360°		
GS-ET-29:2019-06	APC 2			APC 2		

ELECTRICALLY INSULATING SAFETY HELMET SECRA type models: H058E00, H058E0, H058E1 and H058E2

INTENDED USE

The SECRA helmet in models H058E00, H058E0, H058E1 and H058E2 is intended to protect the head against injuries caused by falling objects, while also providing protection against electric shock by preventing the flow of shock current through the head. The helmet is resistant to ignition and also provides protection against molten metal splashes. It is particularly recommended for use as personal protective equipment during live working, work at height, and switching operations. Operating temperature range: -40°C to +50°C. Helmet design type B – peakless / without brim.

MARKING

oznakowanie wewnątrz skorupy hełmu:

hubix	manufacturer's logo
SECRA	helmet type
H058E00, H058E0, H058E1 lub H058E2	helmet model
EN 397:2025	reference standard "Industrial safety helmets"
T1	helmet type according to EN 397:2025
-40°C	very low temperature (–40 °C),
MM	resistance to molten metal splashes (absent in marking)
53-63cm	head circumference adjustment range
$20^{7}/_{8}$-$24^{5}/_{8}$ inch	head circumference adjustment range
ANSI/ISEA Z89.1-2014	reference standard "American National Standard for Industrial Head Protection"
Type I	helmet type according to ANSI/ISEA Z89.1-2014,
Class E	electrical class of the helmet according to ANSI/ISEA Z89.1-2014,
LT	lower temperature according to ANSI/ISEA Z89.1-2014,
HT	higher temperature according to ANSI/ISEA Z89.1-2014
mm/yyyy	date of manufacture (month/year)
LOT NO: XXX	batch number
ABS	helmet shell material
www.secra.pl	website address where the declaration of conformity is available.
CE 1437	marking of conformity with Regulation 2016/425 (Regulation 2016/425 on personal protective equipment with the number of the notified body carrying out conformity to type based on internal production control plus supervised product checks at random intervals (Module C2)
	live working symbol,
EN 50365:2023	reference standard "Electrically insulating helmets for working on low and medium voltage installations"
CLASS 00	electrical class for installations with nominal voltage up to 500 V AC and 750 V DC
CLASS 0	electrical class for installations with nominal voltage up to 1 000 V AC and 1 500 V DC
CLASS 1	electrical class for installations with nominal voltage up to 7 500 V AC
CLASS 2	electrical class for installations with nominal voltage up to 17 000 V AC
AC lub AC/DC	working voltage alternating current or alternating and direct current
TYPE B	helmet type according to EN 50365:2023

Class depending on helmet model

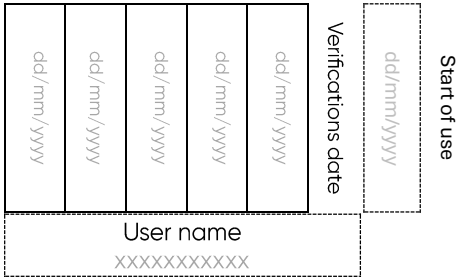

date of putting into service (day/month/year). The service life of the helmet is 60 months from the date the product is put into service

inspection date (day/month/year)

space for entering user data

HUBIX Sp. z o.o.
96-321 ŻABIA WOLA Huta Żabiowolska ul. Główna 43 manufacturer's name and address

QR code (PI system) providing access to the declaration of conformity, user instructions, technical data sheet, and activation of the service life

marking on the rear outer part of the helmet shell:
SECRA helmet type.

ADJUSTMENTS

Before use, the helmet must be properly adjusted to ensure effective protection. The user shall fit the helmet to their head circumference, set the wearing height, and adjust the chin strap length so that the helmet fits properly, does not shift, and does not tilt.

HEAD CIRCUMFERENCE ADJUSTMENT

The helmet features a stepped head circumference adjustment in 2 mm increments ranging from 53 cm to 63 cm. After putting on the helmet, adjust it to the head circumference by turning the adjustment knob (1) located at the rear of the helmet (Fig. 1). Turning counterclockwise (2) loosens, and turning clockwise (3) tightens the headband strap.

WEARING HEIGHT ADJUSTMENT

The helmet features a two-position wearing height adjustment (Fig. 2). After putting on the helmet, ensure that the suspension straps are correctly set for the head height. By default, the harness anchors (1) are fitted in the shallow position (2). To change the wearing height, fit the four harness anchors into the deep position (3).

CHIN STRAP ADJUSTMENT

The chin strap is an essential part of the helmet required to maintain the helmet on the head. The chin strap (Fig. 3) features length adjustment individually for the left and right sides of the strap. For each side, the length of the front section (1) and rear section (2) can be altered by sliding the strap through the splitter (3).

BUCKLING / UNBUCKLING THE CHIN STRAP

To buckle the strap, insert strap element (2) into buckle latch (1) (Fig. 4). To unbuckle the strap, pull back clip (1) and release strap element (2) from the buckle latch (Fig. 5).

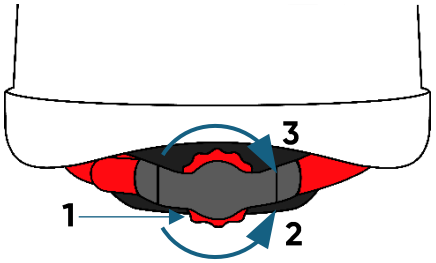

Fig. 1

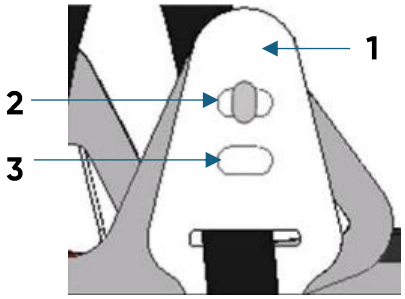

Fig. 2

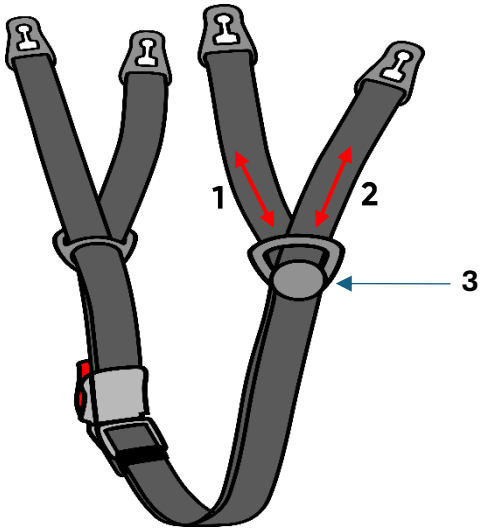

Fig. 3

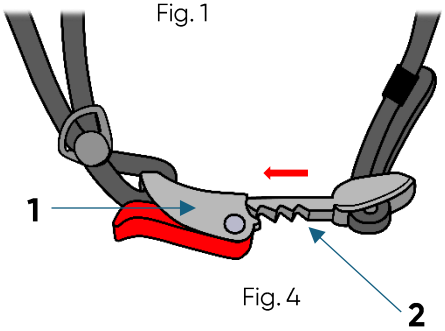

Fig. 4

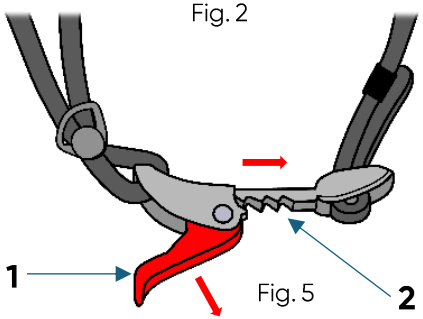

Fig. 5

STORAGE AND TRANSPORTATION

The helmet shall be stored and transported in a separate transport bag or container. Place the helmet away from heat sources. Protect against mechanical damage, compression, direct sunlight, moisture, exhaust fumes, etc. Do not place the helmet directly near room windows or car windshields. Storage at (20±15) °C is recommended.

PRE-USE INSPECTION

Before starting work, a pre-use visual inspection of the helmet must be carried out. The inspection shall include checking:

- absence of visible defects on the helmet shell
- proper functioning of the head circumference adjustment
- correct buckling and attachment of the chin strap
- service life period.

In the event of detecting mechanical damage (cracks, deep scratches, etc.) or chemical damage (discoloration, fading, etc.) to the shell, damage to the harness, malfunction of the head circumference adjustment, defective attachment, latching or damage to the chin strap, or if any doubt arises regarding optimum protection, the helmet must be retired from service.

Pay strict attention to the service life of the helmet, which is 60 months from the date the product is put into service. After this period, the helmet must be retired from service and submitted for disposal.

A contaminated or soiled helmet must not be used for live working.

In case of moisture or dampness, the helmet must be thoroughly dried prior to use.

CAUTION! Prior to starting work, the user shall verify whether the electrical limits of the helmets correspond to the nominal voltage value and the category or class of hazards that may occur during use.

PRECAUTIONS DURING USE

The helmet shall not be used in situations where there is a risk of partial reduction of its insulation properties. ALWAYS comply with the requirements contained in the live working procedures. Helmets absorb impact energy through partial destruction or damage. Even if damage is not visually apparent, any helmet subjected to a severe impact must be retired from service.

AFTER ANY IMPACT, OR THE APPEARANCE OF CRACKS OR DEFECTS, THE HELMET must BE RETIRED FROM SERVICE.

PRECAUTIONS AFTER USE

If the helmet becomes soiled or contaminated, especially its outer surfaces, it must be thoroughly cleaned in accordance with the manufacturer's recommendations set forth in section CLEANING AND DISINFECTION.

PERIODIC INSPECTION

Periodic inspection includes a thorough visual inspection and, where applicable, dielectric tests performed at specified intervals.

Electrically insulating helmets must not be used after 12 months from the date of issue into service, unless they undergo a periodic re-inspection.

For Class 00 and Class 0 helmets, only visual inspection is required.

For Class 1 and Class 2 helmets, if required by national regulations or internal user procedures, the helmets shall, in addition to visual inspection, be subjected to routine dielectric proof testing in accordance with section 6b of EN 50365:2023.

Periodic inspections and tests shall be performed exclusively by formally trained and qualified personnel. The user or testing laboratory shall mark the electrically insulating helmets with the date of the current or next required inspection and test. Such marking must not affect the dielectric properties of the product.

CLEANING AND DISINFECTION:

The helmet and face shield shall be cleaned after each use, enabling thorough inspection and preventing skin irritation of the user. Clean the helmet ONLY with water and mild soap. Dry thoroughly after washing. Do not use solvents, detergents, or abrasive materials for cleaning. Heavily worn sweatbands must be replaced with new ones.

MAINTENANCE

Excessively worn or damaged helmet components must be replaced with new ones. The manufacturer guarantees servicing of the product. Damaged components may be replaced by the user independently or the helmet with the damaged part may be sent to the manufacturer for replacement.

List of spare parts for independent user replacement:

G113.2112	front sweatband
G113.2114	rear sweatband
G113.1111	harness, complete
G113.1115	chin strap with safety clips, complete
G113.1117	reflective sticker set
G114.0101	storage and transport bag.

REPLACEMENT OF SPARE PARTS

SWEATBANDS

PoSweatbands (Fig. 6) are attached using hook-and-loop fasteners to the main headband – front sweatband (1) and rear band – rear sweatband (2). To replace the front sweatband, detach the six hook-and-loop fasteners attaching it around the headband one by one. To replace the rear sweatband, grasp it and pull gently to separate it from the head circumference adjuster. Fit new sweatbands in place of worn ones

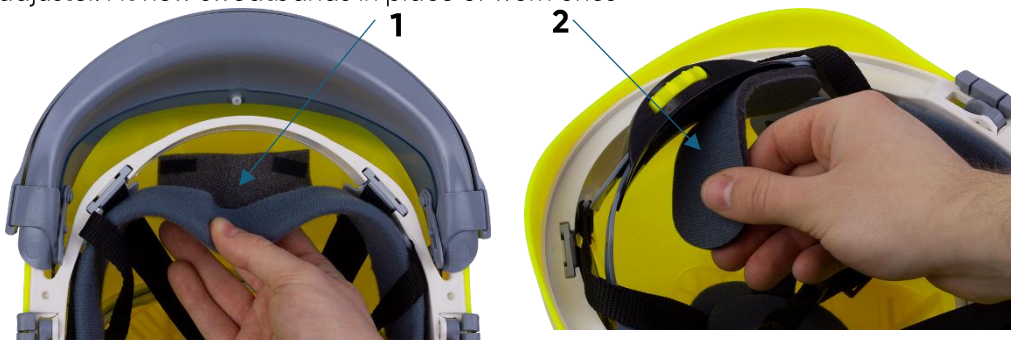

Fig. 6

HARNESS

To replace the harness, firmly grasp the harness anchor and pull it back until an audible click indicates partial release of the anchor (Fig. 7-1), then push the anchor firmly out (Fig. 7-2) until it detaches completely from the headband rim (Fig. 7-3). Repeat these steps for the remaining anchors.

After releasing all four anchors, gently pull to separate the harness from the helmet headband rim. Fit a new harness in place of the damaged one. To do this, insert the harness anchors into the headband rim slots and press them in one by one until hearing a click (securing the anchor latch).

Fig. 7

CHIN STRAP

To replace the chin strap (Fig. 8), grasp the strap anchor (1) and pull firmly to separate it from the helmet headband rim. Repeat this action for the remaining four anchors. Fit a new chin strap in place of the damaged one. To do this, place strap anchor (2) onto pin (3) in the rim, then pull upwards (Fig. 9) until the anchor locks into place (Fig. 10).

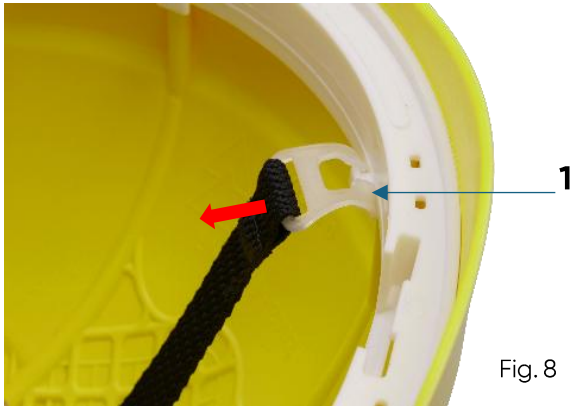

Fig. 8

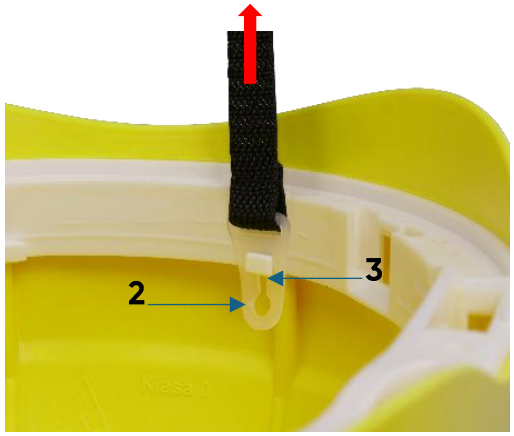

Fig. 9

Fig. 10

ADDITIONAL ACCESSORIES

Optionally, additional accessories may be attached to the helmet:

G113.1116 two adapters, for mounting hearing protectors on the helmet, manufacturer / independent installation

G222.0701 headlamp, for independent installation

SERVICE LIFE

The service life of the helmet is 60 months from the date of putting into service, which must be performed by scanning the QR code and activating the helmet in the PI system prior to first product use. The manufacturing date (month/year) is marked on the inside of the helmet shell. The maximum storage period of the helmet is 24 months from the date of manufacture. If the helmet is not put into service within this period, activation into service shall be performed automatically.

UPON EXPIRATION OF THE SERVICE LIFE, THE HELMET must STRICTLY BE RETIRED FROM SERVICE AND SUBMITTED FOR DISPOSAL.

CAUTION!

AFTER ANY IMPACT, OR THE APPEARANCE OF CRACKS OR DEFECTS, THE HELMET must BE RETIRED FROM SERVICE.

WARRANTY

The manufacturer provides a 24-month warranty on the helmet, calculated from the date of purchase. The warranty DOES NOT cover helmet components showing normal wear and tear, altered or modified parts, improperly stored items, or components damaged as a result of accidents, negligence, or misuse.

WARNING!

- **Wearing a helmet does not guarantee prevention of death or permanent disability.**
- **To ensure adequate protection, the helmet must be adjusted to the size of the user's head.**
- **After any impact, or the appearance of cracks or defects, the helmet must be retired from service.**
- **Do not modify or remove any original components of the helmet.**
- **An electrically insulating helmet must not be used as the sole item of personal protective equipment during live working.**
- **The user shall conduct an appropriate risk assessment to determine whether additional protective equipment must be used in conjunction with the helmet.**
- **Depending on the risk associated with a specific type of work, additional protective equipment must be used alongside the helmet.**
- **The manufacturer shall not be held liable for unauthorized modifications to the equipment, or custom adaptation of working components not supplied with the helmet and not suitable for live working.**
- **Do not apply paints, lacquers, solvents, etc., to the helmet.**
- **Do not apply self-adhesive labels to the helmet without the manufacturer's consent.**
- **Do not use solvents, detergents, or abrasive materials to clean the helmet.**
- **Do not throw, compress, or use the helmet as a support.**
- **Before starting work, verify that the electrical limits for helmets correspond to the nominal voltage value and the category or class of hazards that may occur during use.**
- **Do not wear headwear, liners, warmers, etc., under the helmet unless they have been tested in combination with the helmet. Use of improper headwear may significantly reduce the level of protection.**
- **Always use only headwear (e.g., neck gaiters, balaclavas) recommended by the manufacturer in combination with the helmet.**
- **Any part of the PPE coming into contact or potential contact with the user's skin may cause allergic reactions in sensitive individuals.**

INTEGRATED FACE SHIELD type ARC-E40HT

INTENDED USE

The integrated face shield ARC-E40HT is intended to protect the user's face against thermal hazards caused by an electric arc (APC 2 - Box Test and ELIM 28 cal/cm² – open arc). It also provides protection against high-speed particle impact (ET level at extreme temperatures), liquid drops and splashes, as well as molten metal splashes and hot solids. The face shield also features UV protection filters and an anti-fog inner coating.

The face shield shall provide full protection only when used in combination with SECRA type helmets, models H058E00, H058E0, H058E1, and H058E2.

Particularly recommended for use as personal protective equipment during live working and switching operations.

MARKING

Marking on the face shield visor

16321	reference standard "Eye and face protection for industrial use - Part 1: General requirements"
hubix	manufacturer's logo
3	protection against liquid droplets
9	protection against molten metal splashes and hot solids
N	resistance to fogging
ET	impact resistance level (120 m/s) at extreme temperatures
1-M	head size
CE 1437	marking of conformity with Regulation 2016/425 (Regulation 2016/425 on personal protective equipment with the number of the notified body carrying out conformity to type based on internal production control plus supervised product checks at random intervals (Module C2)
mm/yyyy	date of manufacture (month/year)
ARC-E40HT	face shield type
ANSI/ISEA Z87.1-2020	reference standard "American National Standard for Occupational and Educational Personal Eye and Face Protection Devices"
Z87+	high-mass and high-velocity impact resistance
U6	UV filter code
R5	IR filter code
HUBIX Sp. z o.o.	
96-321 ŻABIA WOLA Huta Żabiowolska ul. Główna 43	manufacturer's name and address
WWW.SECRA.PL	website address where the Declaration of Conformity is available.
	symbol for protection against thermal hazards of an electric arc
EN IEC 62819:2023	reference standard "Live working - Eye, face and head protectors against the thermal hazards of an electric arc - Test methods and performance requirements"
ELIM 28 cal/cm²	electric arc protection parameter
APC2	electric arc protection class
LTC2 UL1,7	luminous transmittance class (LTC2), UV filter code (U1.7), color recognition (L)
ATPV 36 cal/cm²	electric arc protection parameter according to ASTM F2178/F2178M-20
ASTM F2178/F2178M-20	reference standard "Standard Test Method for Determining the Arc Rating and Standard Specification for Eye or Face Protective Products"

Marking on the face shield frame

16321	reference standard "Eye and face protection for industrial use - Part 1: General requirements"
hubix	manufacturer's logo
3	protection against liquid droplets
9	protection against molten metal splashes and hot solids
ET	impact resistance level (120 m/s) at extreme temperatures
1-M	head size

ASSEMBLY / DISASSEMBLY

The integrated face shield ARC-E40HT must be installed exclusively on SECRA type helmets, models H058E00, H058E0, H058E1, and H058E2.

To assemble the face shield, place the helmet stably by rotating it 180° relative to the horizontal axis. Next, bend the white end caps outwards and push them downwards (Fig. 1). Then, unpack the face shield, making sure to peel off the protective film. Before inserting the face shield into the helmet, set it in the correct position (Fig. 2). During assembly, maintain the position of the hinges and latch. Once the face shield is prepared, insert it into the helmet (Fig. 3.1 and 3.2) and slide the white latches into the guide on the rim until an audible click is heard (Fig. 4.1 and 4.2)

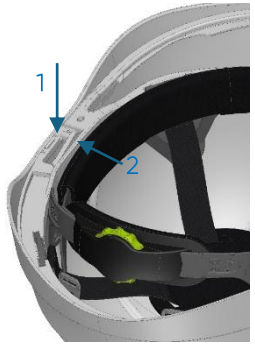

Fig. 1

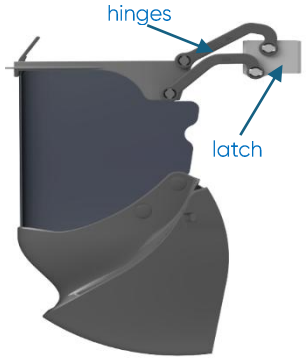

Fig. 2

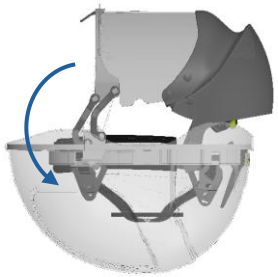

Fig. 3.1

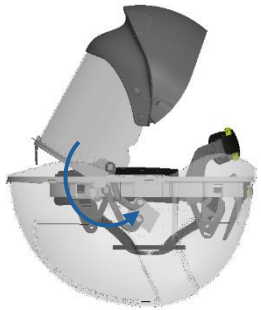

Fig. 3.2

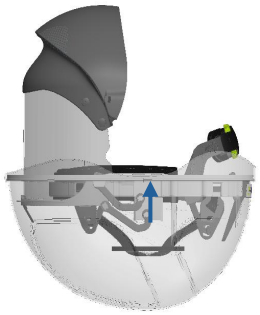

Fig. 4.1

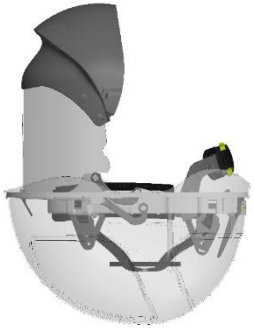

Fig. 4.2

To disassemble the face shield, place the helmet stably by rotating it 180° relative to the horizontal axis. Next, bend the white latch outwards and push it downwards (Fig. 5). When the latch slides out of the guide in the rim, rotate the face shield and remove it from the helmet (Fig. 6.1, 6.2, and 6.3).

Fig. 5

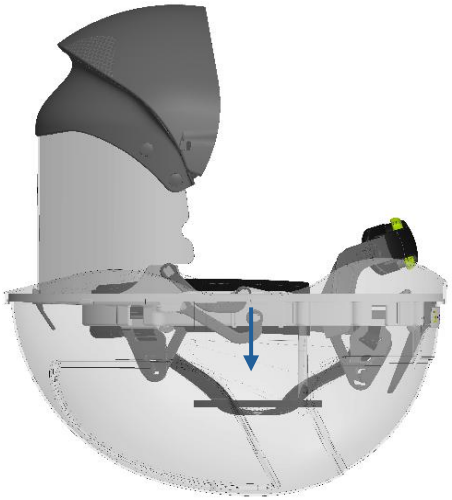

Fig. 6.1

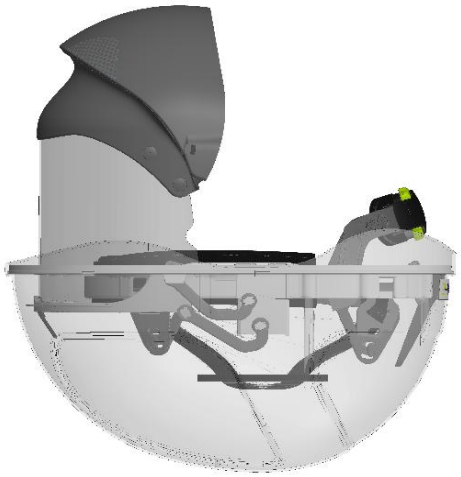

Fig. 6.2

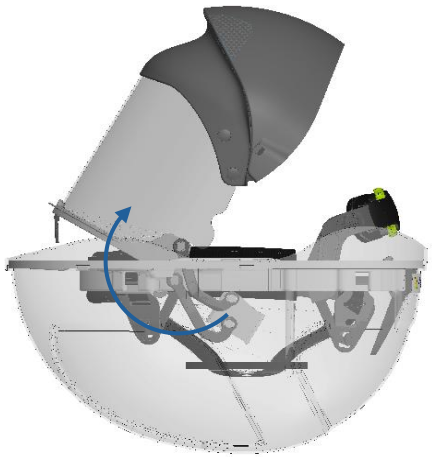

Fig. 6.3

ADJUSTMENTS

Before using the helmet and face shield assembly, the helmet must be properly adjusted to provide effective protection. The user shall adjust the helmet to their head circumference, set the wearing height, and adjust the chin strap length so that the helmet fits securely, does not slip, and does not tilt (see the electrically insulating safety helmet manual).

LOWERING / RAISING THE FACE SHIELD

1. To lower (open) the face shield (Fig. 7), gently grasp it with both hands, thumbs on the inside (1), and pull (2) until it fully extends outside the helmet (3), then rotate the chin protector by pulling it towards yourself (4) until the chin hinges click into place.
2. To raise (close) the face shield, first rotate the chin protector (5) until the chin cover clicks into place (6), and then slide the face shield into the helmet by pushing it upwards (7).

CAUTION! Improper use or opening/closing of the face shield contrary to instructions may cause damage. Do not apply excessive pressure to the face shield components and do not close or open it too quickly.

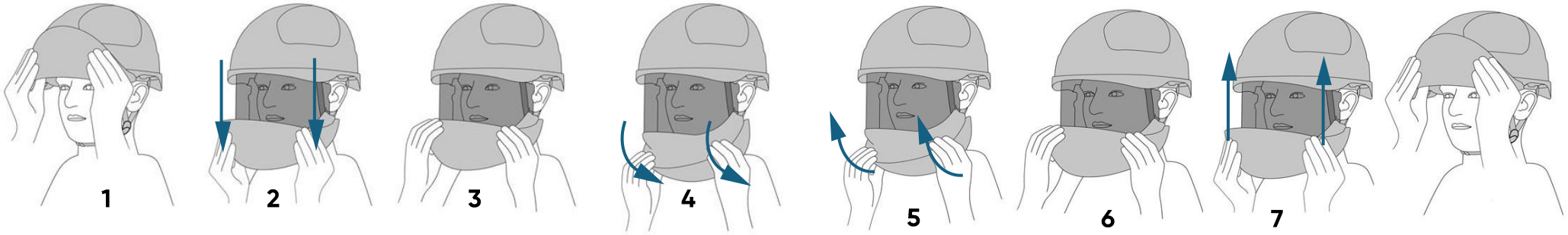

Fig. 7

PRE-USE INSPECTION

The integrated face shield shall be used in accordance with the manufacturer's instructions for use.

Before starting work, a pre-use inspection of the face shield must be performed. The visual inspection shall include checking:

- absence of visible defects on the face shield;
- proper operation and functioning of the face shield;
- service life period.

Do not use face shields that are contaminated or damaged to an extent that impairs their protective properties. In the event of mechanical damage (cracks, deep scratches, punctures) or chemical damage (discoloration, clouding, etc.) to the face shield, improper operation, or any doubt regarding the provision of an optimal protection level, the face shield must be withdrawn from use. Do not use face shields contaminated with grease, oil, flammable liquids, or combustible materials.

The user shall treat the helmet and face shield as an integrated assembly.

Do not use any additional accessories or components that may melt under the influence of an electric arc (polyamide, polyester, or acrylic fibers).

CAUTION! Before commencing work, the user must verify that the limitations correspond to the category or class of hazards that may occur during use.

The face shield ARC-E40HT has a luminous transmittance class of 2 (LTC2). Under normal working conditions, auxiliary lighting must be mandatory. However, it is recommended that the user perform a color recognition evaluation suitable for the actual working environment prior to starting work.

Artificial lighting, particularly light from fluorescent or LED lamps, may distort colors and impair color recognition capabilities. ALWAYS ensure that you can distinguish cable color codes at the workplace under normal lighting conditions.

Before starting work, confirm color recognition by performing the following procedure:

1. Collect cable samples with the same color codes as those used in the workplace;
2. Ensure the process is carried out in a safe location with lighting (type and intensity) matching that of the workplace;
3. Clean the face shield and inspect it for damage (replace the face shield if necessary);
4. Lower the face shield in accordance with the instructions for use;
5. Sort the cable samples.

If you encounter difficulties in distinguishing coding colors or if the sorting result is incorrect, the workplace lighting may be insufficient. Poor lighting can cause accidents, e.g., an electric arc.

PRECAUTIONS DURING USE

The face shield must not be used in situations where there is a risk of partial degradation of its protective properties. ALWAYS comply with the requirements specified in live working organization procedures. Under normal working conditions, auxiliary lighting IS required.

PRECAUTIONS AFTER USE

If the face shield becomes soiled or contaminated, it must be thoroughly cleaned in accordance with the manufacturer's recommendations provided in section CLEANING AND DISINFECTION.

STORAGE AND TRANSPORTATION

If the face shield is attached to the helmet, the assembly must be stored and transported in a separate protective bag or container. During storage or transport, the face shield shall be stowed inside the helmet shell. Keep the assembly away from heat sources. ALWAYS protect against mechanical damage, compression, direct sunlight, moisture, exhaust fumes, etc. Do not place the assembly directly next to room windows or vehicle windshields. Storage at a temperature of (20±15) °C is recommended.

CLEANING AND DISINFECTION:

The face shield shall be cleaned after each use to allow for detailed inspection. Clean the face shield exclusively using water with mild soap. Dry thoroughly after washing. ALWAYS use the microfiber cloth supplied with each helmet to clean the visor surface.

CAUTION! The face shield may be damaged by certain aggressive chemical substances. Do not use solvents, detergents, or abrasive materials for cleaning.

MAINTENANCE

Excessively worn or damaged face shield components must be replaced with new ones. The manufacturer guarantees full servicing of the product. Damaged components may be replaced by the user independently or returned to the manufacturer for replacement.

List of spare parts for independent user replacement:

G113.1127	ARC-E40HT face shield, complete
G114.1111	cleaning cloth

If a damaged component cannot be repaired or replaced, the face shield must be retired from service and disposed of.

SERVICE LIFE

The service life of the face shield is 60 months from the date of placing into service, unless a shorter period results from the service life of the helmet to which it is attached.

UPON EXPIRATION OF THE SERVICE LIFE, THE FACE SHIELD must BE STRICTLY WITHDRAWN FROM USE AND DISPOSED OF.

CAUTION!

IN THE EVENT OF: CRACKING, PUNCTURE, OR CLOUDING, THE FACE SHIELD must BE REPLACED OR WITHDRAWN FROM USE.

WARRANTY

The manufacturer provides a 24-month warranty for the ARC-E40HT face shield, starting from the date of purchase. The warranty does not cover ARC-E40HT face shields showing signs of normal wear and tear, altered or modified, improperly stored, or damaged as a result of accidents, negligence, or misuse.

WARNING!

- **Depending on the risk associated with a specific type of work, additional protective equipment must be used in addition to the helmet with face shield.**
- **The manufacturer shall not be held liable for unauthorized modifications to the equipment or custom fitting of components not included with the face shield and not rated for live working.**
- **Do not cover the face shield with paints, lacquers, etc.**
- **Do not apply self-adhesive labels to the ARC-E40HT face shield without manufacturer approval.**
- **Do not use solvents, detergents, or abrasive materials to clean the face shield.**
- **Before starting work, verify that the face shield limitations correspond to the hazard category or class expected during use.**
- **The face shield ARC-E40HT must be used exclusively with SECRA helmet models H058E00, H058E0, H058E1, and H058E2.**
- **The face shield protects against hazards ONLY when fully lowered.**
- **The face shield, when worn over standard prescription spectacles, may transmit high-velocity particle impacts, causing deformation of corrective lenses and creating a hazard for the user.**
- **A face shield that has been subjected to impact must not be used and must be withdrawn from use and replaced.**
- **The face shield IS NOT suitable for driving vehicles at night or under poor lighting conditions.**
- **Any part of the PPE coming into contact or potential contact with the user's skin may cause allergic reactions in sensitive individuals.**
- **If symbols for protection against high-speed particles are not identical for both the visor and the frame, the lower protection level shall be assigned to the complete eye protector.**
- **Protection corresponding to code numbers/letters 7, 9, CH IS provided by the complete face shield ONLY when the corresponding symbols are identical on both the visor and the frame.**
- **ALWAYS keep the face shield clean, especially its transparent visor.**

360 Shield type SH-360

INTENDED USE

The 360 shield type SH-360 is intended to protect parts of the user's face, ears, and neck against thermal hazards caused by an electric arc (APC 2 - Box Test and ELIM 25 cal/cm² – open arc). The 360 shield is designed and manufactured to be compatible with SECRA helmets models H058E00, H058E0, H058E1, and H058E2 and the integrated face shield ARC-E40HT. The shield may also be used in situations where exposure to heat and flame occurs.

The 360 shield shall provide full protection only when used in combination with SECRA type helmet models H058E00, H058E0, H058E1, and H058E2, and the integrated face shield ARC-E40HT.

The 360 shield is made of two layers of flame-retardant and antistatic navy blue fabric. The 360 cover features Velcro fasteners to secure it under the chin, and to fasten it onto the helmet when raised. On the inner side, the 360 shield has high-visibility yellow fabric webbings to guide the helmet chin strap and place markings. Furthermore, the bright color of these straps signals from a distance that the user's 360 cover is in the raised position. The 360 shield is available in one universal size.

The fabrics used are tear-resistant and feature durable colors. They possess flame-resistant properties and are resistant to small splashes of molten metal. Hook-and-loop fasteners and threads used in this product are also flame-resistant.

MARKING

marking printed on the 360 shield:

hubix	manufacturer's logo
SH-360	360 shield type
PPE 2016/425	marking of product conformity with Regulation (EU) 2016/425
	symbol for protection against heat and flame
	welding protection symbol (Note: The shield is not intended for use in welding processes; the shield meets the requirements of selected clauses of standard PN-EN ISO 11611:2015-11 (EN ISO 11611:2015), namely 6.2, 6.3 (tear resistance – Class 2), 6.6, 6.7.1, 6.7.2.2, 6.7.2.3 and 6.7.3.3 (flame spread limitation – A1+A2), 6.8 (resistance to small splashes of molten metal – Class 1), 6.9 (heat radiation – Class 1) and 6.10)
APC 2	arc flash protection class
GS-ET-29:2019-06	reference standard "Principles of testing and certification of face shields for electrical work"
	symbol for protection against thermal hazards caused by an electric arc
EN IEC 62819:2023	reference standard *„Live working - Eye, face and head protectors against the effects of electric arc - Performance requirements and test methods"*
ELIM 25 cal/cm²	electric arc protection parameter
360°	symbol for full 360° protection
ROZMIAR UNIWERSALNY	the 360 shield is available in one size
PROD mm/rr	date of manufacture month/year
NR SERII	serial number / year

Material composition:

COMPOSITION: outer fabric (75% Nomex / 13% MAC / 10.5% CO / 1.5% antistatic fiber), inner fabric (100% Nomex)

60	Wash at a maximum temperature of 60 °C
	Iron at 110 °C
	Do not bleach
	Tumble dry at 40 °C

requirement to consult manufacturer's instructions

CE 1437 marking of conformity with Regulation 2016/425 and the number of the notified body carrying out conformity to type based on internal production control plus supervised product checks at random intervals (Module C2))

HUBIX Sp. z o.o.
96-321 ŻABIA WOLA, Huta Żabiowolska ul. Główna 43 manufacturer name and address
www.secra.pl website address where the declaration of conformity is available.

The marking is located on the inner side of the rear yellow hi-vis strap.

MOUNTING ON THE HELMET

Fig. 1

The protective shield against thermal hazards of an electric arc is supplied in helmet mounting kits with self-adhesive hook-and-loop strips. The length of the hook-and-loop strips allows the shield to be adjusted to the needs of each user. When not in use, the shield can be fastened onto the top part of the helmet. In this position, the yellow tapes are visible, signaling from a distance that the user is not currently protected against the thermal hazards of an electric arc. (Fig. 1)
The mounting procedure for the 360 shield is described below step by step.

1. Unpack the 360 shield.

2. Position the helmet so that its interior is easily accessible

3. Peel off the protective film from the included hook-and-loop strips

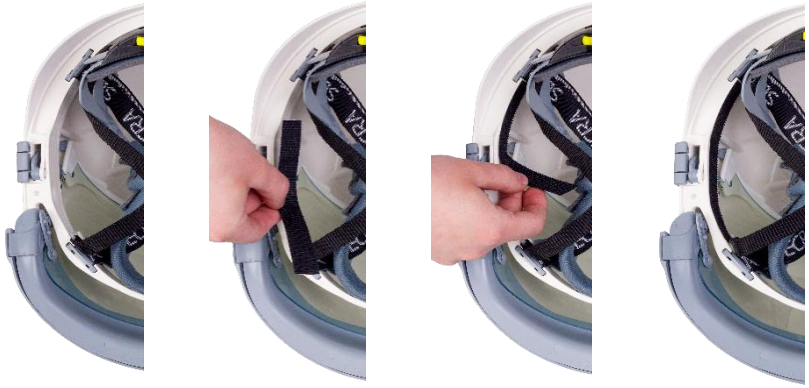

4. Gently pull back the harness with sweatbands to expose the inner side of the helmet, then attach the hook-and-loop strip there. Repeat steps 2–4 to attach the hook-and-loop strip on the opposite side of the helmet

5. Attach the hook-and-loop strip to the rear inner section of the helmet, below the adjustment dial.

6. Place the 360 shield inside the helmet, attach it at the rear and on both sides, then press firmly into place.

PRE-USE INSPECTION

Before starting work, a pre-use inspection of the 360 shield must be performed. The visual inspection shall include checking:

- absence of visible defects on the 360 shield;
- proper attachment of the 360 shield to the helmet;
- service life period.

In the event of detecting mechanical damage to the 360 shield (abrasions, tears, etc.), chemical damage (severe discoloration, fading, etc.), improper attachment or fastening, or any doubt regarding the provision of optimal protection, the 360 shield must be withdrawn from use.

ALWAYS pay attention to the service life of the 360 shield, which is 60 months from the date of manufacture marked on each 360 shield, or 5 washing cycles at 60 °C. After this period, the 360 shield must be withdrawn from use and disposed of.
In case of dampness/moisture, the 360 shield must be thoroughly dried before use.

CAUTION! Before commencing work, the user must verify that the limitations correspond to the category or class of hazards that may occur during use.

PRECAUTIONS DURING USE

Shields should not be used in situations where there is a risk of partial degradation of their protective properties. Comply with the requirements specified in procedures for organizing live work.
360 shields that have been contaminated with greases, oils, or flammable materials must not be used. Such 360 shields must be washed and dried before use. In the event of accidental contamination of the 360 shield with chemical substances, including flammable ones, the user must remove it immediately, taking particular care to prevent skin contact with the substance.

PRECAUTIONS AFTER USE

If the 360 shields become soiled or contaminated, especially on their outer surfaces, they must be thoroughly cleaned in accordance with the manufacturer's recommendations provided in section CLEANING AND DISINFECTION.

STORAGE AND TRANSPORTATION

360 shield must be stored and transported in a manner that prevents damage. Store 360 shield away from heat sources. ALWAYS protect against mechanical damage, direct sunlight, moisture, exhaust fumes, etc. Do not place side 360 shield directly next to room windows or vehicle windshields. Storage at a temperature of (20±15) °C is recommended.

CLEANING AND DISINFECTION

360 shieldshall be cleaned after each use to allow for detailed inspection and to prevent skin irritation of the user. Clean light soiling exclusively using water with mild soap. Dry thoroughly after washing.
In case of heavy soiling, it is recommended to wash the shield in water at a temperature not exceeding 60 °C with mild soap. After washing, thoroughly dry in a tumble dryer at 40 °C.
CAUTION! The 360 shield may be damaged by certain aggressive chemical substances. Do not use bleaches, strong detergents, or abrasive materials for cleaning.

SERVICE LIFE

The service life of the shield is 60 months from the date of manufacture (provided the number of wash cycles does not exceed 5 / max. wash temp. 60 °C). The date of manufacture (month/year) is printed on each shield. The shields retain their protective properties for up to 5 wash cycles; after this time, they must be retired from service.

UPON EXPIRATION OF THE SERVICE LIFE, THE SHROUDS must BE STRICTLY WITHDRAWN FROM USE AND DISPOSED OF.

CAUTION!

UPON APPEARANCE OF ABRASIONS, TEARS, OR DISCOLORATION, THE SHROUDS must BE WITHDRAWN FROM USE.

WARRANTY

The manufacturer provides a 24-month warranty for the 360 shield, starting from the date of purchase. The warranty does not cover 360 shields showing signs of normal wear and tear, altered or modified, improperly stored, or damaged as a result of accidents, negligence, or misuse.

WARNING!

- **Upon any appearance of abrasions, tears, or material discoloration, the 360 shield must be withdrawn from use.**
- **Do not modify the 360 shield.**
- **The shield must not be used as the sole personal protective equipment during live work.**
- **Depending on the risk associated with a specific type of work, additional protective equipment must be used in addition to the 360 shield attached to the helmet.**

- **When using a set of multiple PPE items of different classes, the overall arc protection will correspond to the item in the set with the lowest class.**
- **The manufacturer shall not be held liable for unauthorized modifications to the 360** shield **or custom fitting of the 360** shield **to other helmet types.**
- **Do not cover the 360 shield with paints, lacquers, etc.**
- **Do not apply self-adhesive labels to the 360 shield without manufacturer approval.**
- **Do not use strong detergents or abrasive materials to clean the shield.**
- **Before starting work, verify that the electrical limitations of the 360 shield correspond to the hazard category or class expected during use.**
- **During work where a risk of electric arc and/or hot factors and flame exists, the shield should be fully lowered and fastened under the chin.**
- **Other clothing worn together with the shield or a soiled shield may reduce the level of protection.**
- **Do not wear any clothing items under the 360 shield (e.g., caps, balaclavas, scarves) made of fibers that may melt when exposed to an electric arc (e.g., polyamide or polyester fibers).**
- **The shield does not provide protection against electric shock.**
- **The 360 shield must be used exclusively with SECRA type helmet models H058S, H058E00, H058E0, H058E1, and H058E2.**

The product complies with the requirements of the following standards:

PN-EN ISO 11611:2015-11 (EN ISO 11611:2015) "Protective clothing for use in welding and allied processes" regarding clauses: 6.2, 6.3 (tear strength - Class 2); 6.6, 6.7.1, 6.7.2.2, 6.7.2.3, and 6.7.3.3 (limited flame spread - A1+A2); 6.8 (small molten metal splashes resistance - Class 1); 6.9 (radiant heat - Class 1), 6.10.

PN-EN ISO 11612:2015-11 (EN ISO 11612:2015) "Protective clothing - Clothing to protect against heat and flame - Minimum performance requirements" regarding clauses: 4.3 (hardware/fasteners only); 6.2.1, 6.3.1, 6.3.2.2, 6.3.2.3, and 6.3.3.3 (limited flame spread - A1+A2); 6.4, 6.5.1, 6.5.2.1, 7.2 (convective heat - B1); 7.3 (radiant heat - C1); 7.6 (contact heat - F1).

PN-EN 61482-2:2020-09 (EN 61482-2:2020) "Live working - Protective clothing against the thermal hazards of an electric arc - Part 2: Requirements" regarding clauses: 4.2 (fasteners and materials only); 4.3.1, 4.3.2, 4.3.3, 4.3.3.1, 4.3.3.3 (limited flame spread - A1+A2); 4.3.4.1, 4.3.4.2, 4.3.5, 4.4.1, and 4.4.3 (protection against thermal effects of electric arc APC 2: material assembly only).

GS-ET-29:2019-06 "Principles of testing and certification of face shields for electrical work" – tests performed for Class 2 regarding clause 4.2. An additional calorimeter was placed at the ear position on the headform.

PN-EN IEC 62819:2023-10 (EN IEC 62819:2023) "Live working - Eye, face and head protectors against the effects of electric arc - Test methods and performance requirements" regarding clause 4.2 design requirements, clause 4.4.6 other requirements for textile components, and clause 5.2.4 testing of protectors providing 360° protection.